GENERAL NOTES:
1. MATERIAL: **ALUMINUM, 6061-T651**
2. SPECIAL FINISH: **Black anodization**
3. SURFACE ROUGHNESS (UNLESS SPECIFIED OTHERWISE): (AVERAGE MICRO-INCHES)
4. INTERPRET DIMENSIONS AND TOLERANCES PER ASME Y14.5M-1994
5. DEBURR AND BREAK ALL SHARP EDGES, MAX 0.010" (UNLESS SPECIFIED OTHERWISE)
6. PARTS ARE TO BE CLEAN AND FREE OF OIL, GREASE, AND OTHER CONTAMINANTS
7. DIMENSIONS INCLUDE CHEMICALLY APPLIED FINISHES IF APPLICABLE

Revision notes:
* 6 6-32 UNC holes were added in revision 1

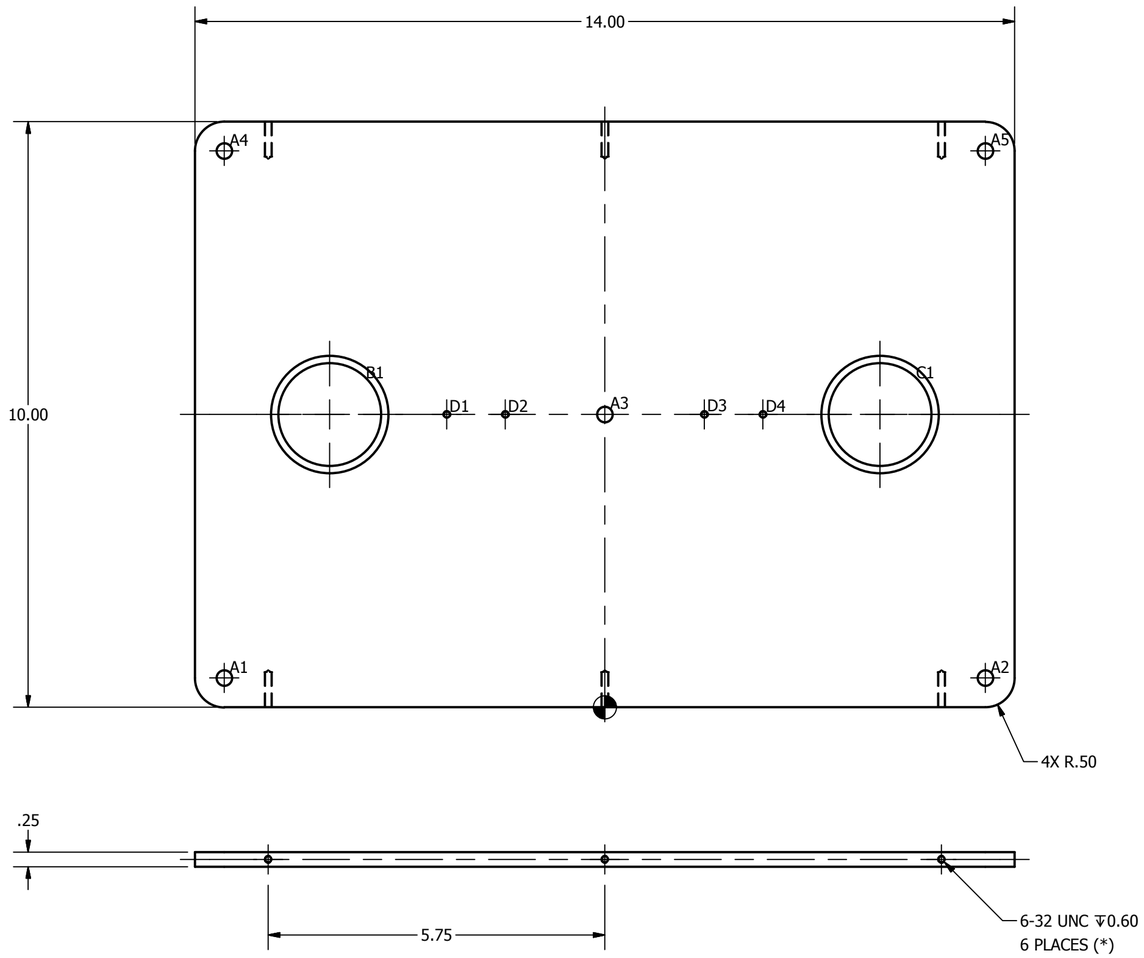

HOLE TABLE			
HOLE	XDIM	YDIM	DESCRIPTION
A1	-6.50	.50	Ø.266 THRU
A2	6.50	.50	Ø.266 THRU
A3	.00	5.00	Ø.266 THRU
A4	-6.50	9.50	Ø.266 THRU
A5	6.50	9.50	Ø.266 THRU
B1	-4.70	5.00	Ø1.750 THRU ⌵ Ø2.00 X 90°
C1	4.70	5.00	Ø1.750 THRU ⌵ Ø2.00 X 90°
D1	-2.70	5.00	6-32 UNC - 2B
D2	-1.70	5.00	6-32 UNC - 2B
D3	1.70	5.00	6-32 UNC - 2B
D4	2.70	5.00	6-32 UNC - 2B

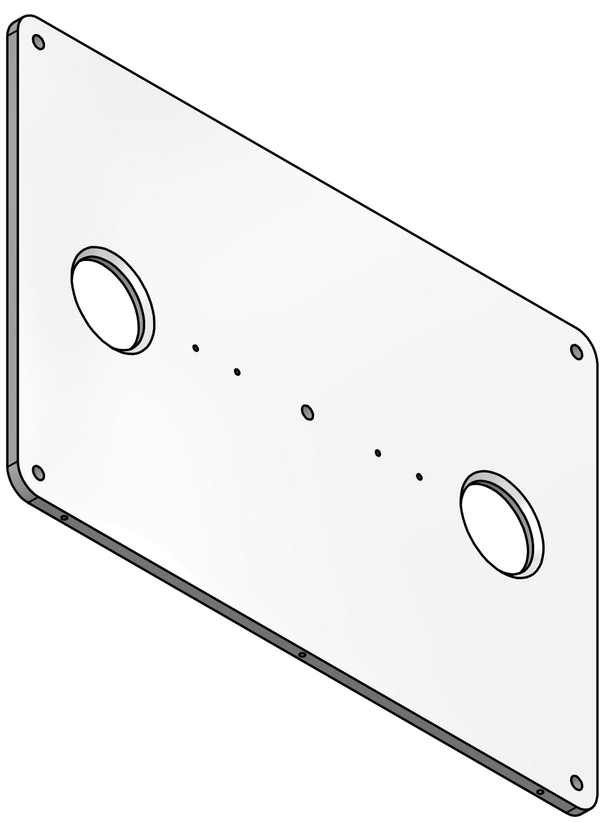

NOTICE:
INFORMATION CONTAINED IN THIS DOCUMENT OR ANY REPRODUCTION THEREOF, IS PROPRIETARY INFORMATION AND PROPERTY OF HOWARD HUGHES MEDICAL INSTITUTE. IT SHALL NOT BE DISCLOSED, COPIED, DUPLICATED OR USED FOR MANUFACTURE, PRODUCTION OR PROCUREMENT, WITHOUT THE EXPRESS WRITTEN PERMISSION OF HOWARD HUGHES MEDICAL INSTITUTE.

(UNLESS SPECIFIED OTHERWISE)
PRIMARY UNITS: INCHES
[SECONDARY UNITS]: MILLIMETERS

PRIMARY TOLERANCES:	
X.X	± 0.020
X.XX	± 0.010
X.XXX	± 0.005
X.XXXX	± 0.0005
ANGULAR	± 0.5 DEG

- DO NOT SCALE DRAWING -
THIRD ANGLE PROJECTION:

HHMI
HOWARD HUGHES MEDICAL INSTITUTE
HHMI janelia farm research campus

HeaterPlate.ipt

SIZE	PART NUMBER	REV	SHEET
C	HeaterPlate2	1	1 OF 1